G7 REVOLVER SERIES MANUAL

G&G ARMAMENT www.Guay2.com

TOP FIVE
FUTURE INNOVATION
FINEST QUALITY
FAST SERVICE
FREE ITEMS
FAIR PRICE

6 STANDARD MAG · CO2 · INTERMEDIATE

G732
Explosion View

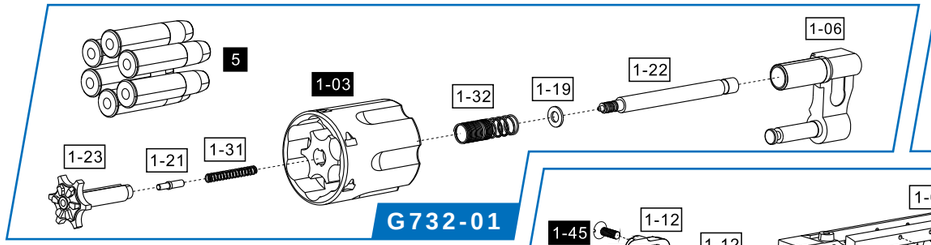

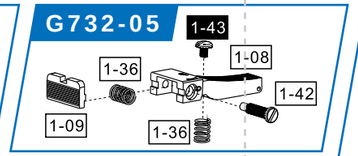

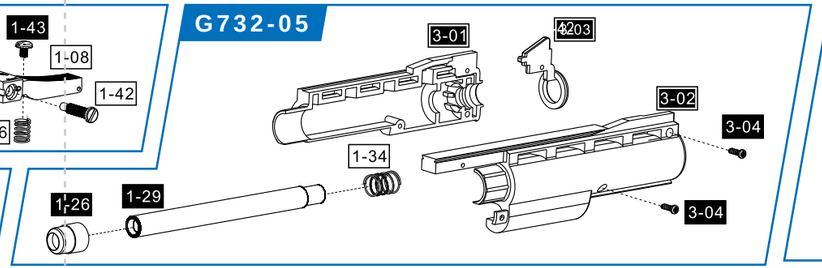

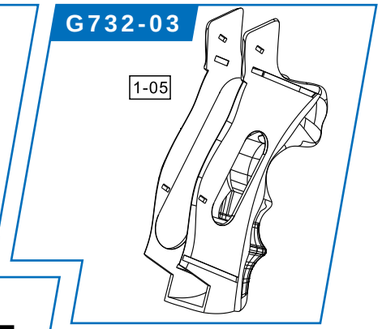

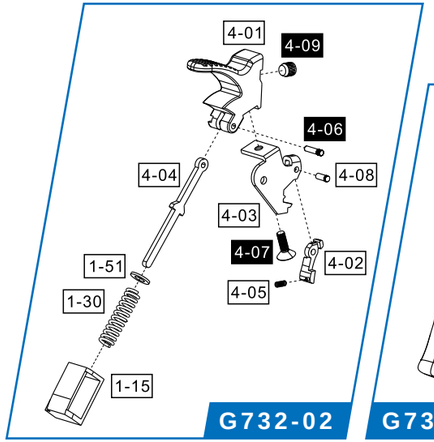

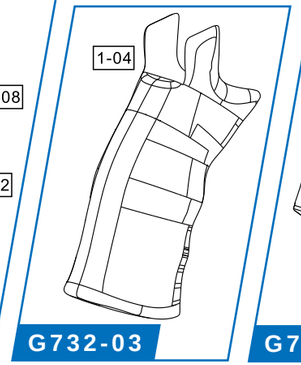

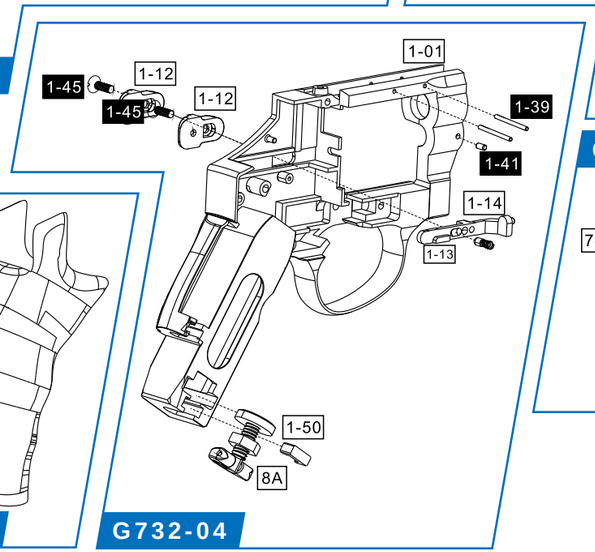

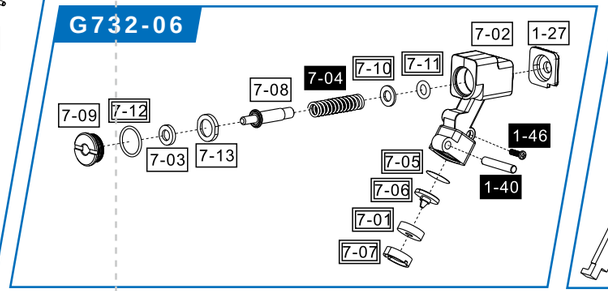

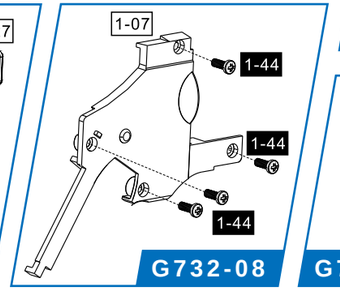

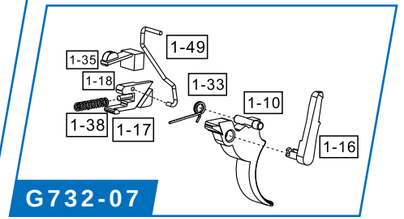

TOP FIVE
FUTURE INNOVATION
FINEST QUALITY
FAST SERVICE
FREE ITEMS
FAIR PRICE

G732-01	Cylinder Set	G732-05	Barrel Set
G732-02	Hammer Set	G732-06	Firing Pin Set
G732-03	Grip Panel	G732-07	Trigger Set
G732-04	Left Metal Receiver	G732-08	Right Metal Receiver

- You may buy all of the parts from G&G Support Dep or your Local G&G distributor.
- E-Mail: support@guay2.com