TOP FIVE

FUTURE INNOVATION
FINEST QUALITY
FAST SERVICE
FREE ITEMS
FAIR PRICE

G&G ARMAMENT
AIRSOFT GUNS & ACCESSORIES

Future innovation

G&G always brings you the most innovative products. We not only replicate real steel firearms, but we also push our R&D to develop more features and ergonomic designs to meet the high standards of our customers' demand.

Finest quality

G&G offers industry leading manufacturer warranty coverage of up to 90 days after the purchase of a G&G gun. We stand behind our quality and test every single rifle before shipment.

Fast service

We have dedicated and professional employees who work on end users' emails and dealers' inquiries. We have personnel and professionals working daily to ensure all inquiries are responded to in a timely manner. Most warranty claims are dealt with within 24 hours by our customer support department.

Free items

G&G offers the most variety of free items for our customers, and we continue to release new giveaways frequently. We always offer a variety of promotional materials for events and sponsorships to help and support the Airsoft community.

Fair price

Customer satisfaction is G&G's main goal. We offer top dollar products to our customers, and we never cut corners to build our products.

FOR AIRSOFT ONLY

6 BB'S STANDARD MAG

CO_2 12 Gram

INTERMEDIATE

TAIWAN

Sales Dept.
sales@guay2.com , b2b@guay2.com
Technology Support Dept.
support@guay2.com
PR Dept. pr@guay2.com

Chang Hua (Headquarter)
Tel : +886-4-798-9000 **Fax :** +886-4-798-9900
No.999, Zhonghua Rd. Shengang Township,
Changhua County 50952, Taiwan (R.O.C.)

Taipei
Tel : +886-2-2692-2000 **Fax :** +886-2-2692-4000
11F-3., No.27, Lane 169, Kangning St. Shijr City,
Taipei County 22180, Taiwan (R.O.C.)

U.S.A. (Warehouse)

Los Angeles
E-mail sales101@guay2.com
Tel : +1-626-581-0101
Fax : +1-626-581-1011
1122 Coiner Court,
City of Industry, CA 91748 (U.S.A.)

Dealer

G2-201404-05-英

TOP FIVE
FUTURE INNOVATION
FINEST QUALITY
FAST SERVICE
FREE ITEMS
FAIR PRICE

SERIES MANUAL
G7 REVOLVER

G&G ARMAMENT www.Guay2.com

G731/G732/G733/G734

G7 REVOLVER SERIES MANUAL

G&G ARMAMENT www.Guay2.com

TOP FIVE
FUTURE INNOVATION
FINEST QUALITY
FAST SERVICE
FREE ITEMS
FAIR PRICE

6 STANDARD MAG | CO_2 | INTERMEDIATE

Warning

WARNING

- For the best performance and warranty, do not use this product in an environment under 18 degree C.
- Always wear eye protection when playing airsoft.
- Incorrect use may cause injury or death.
- Read the whole manual before using.
- Adult supervision required.
- Never point an Airsoft gun at animals or humans.
- Buyers and users must obey all laws and rules of the local authorities in their area.
- This product is suggested for users 18 years or older.

For more product information please visit our website www.guay2.com

You may be liable for damaging public, personal property, or for injuring a person or an animal. Always observe good manners and enjoy fun sport shooting.

When you carry the air gun, attach the safety cap, set the selector lever to the safety position, and always put the air gun in a case or bag.

Safety procedures:
1.Set the selector lever to the safety position.
2.Remove the BBs.
3.Remove the CO2 cartridge.

Select a safe place for operating the air gun and avoid places where people and cars are around.

When shooting the air gun for target practice or in a game situation, you and all participants must wear safety goggles or other eye protective gear. Please pay attention to ricochets and third parties around you.

Always attach the safety cap to the muzzle, remove the battery or CO2 cartridge, and store the air gun in a case or bag and at a place that is out of reach of children.

Never direct the muzzle towards a person, animal, or in any direction that may cause harm or damage to a third party.

CO_2 cartridges may explode at temperatures above 120°F (48.9°C). Do not mutilate or incinerate them. Do not expose them to heat or store CO_2 cartridges at temperatures above 120°F (48.9°C).

Looking into the muzzle is extremely dangerous, regardless of having BB's loaded or not. If you get hit in the eye by a BB pellet, worst case scenario, you may lose your eye sight.

Activating the trigger carelessly is extremely dangerous. Never put your finger on the trigger unless the safety cap is removed and you are ready to shoot a target.

There may be cases where some BB's remain in the gun after the magazine has been removed. After removal of the magazine, direct the muzzle towards a safe direction and pull the trigger to confirm that there are no BB's remaining in the gun, then attach the safety cap.

Disassembling or modifying the gun may adversely affect the performance and make it dangerous. It would also void the warranty.

G7 Revolver Series List

TOP FIVE
FUTURE INNOVATION
FINEST QUALITY
FAST SERVICE
FREE ITEMS
FAIR PRICE

[G731 BK]

TYPE : CO2
LENGTH : 196 mm
RECEIVER : Metal
MAGAZINE : 6 Rounds
INNER BARREL : 64 mm
WEIGHT : 743 g
CO2 : 12 g
REF. VELOCITY : 120-140 m/sec

[G731 SV]

TYPE : CO2
LENGTH : 196 mm
RECEIVER : Metal
MAGAZINE : 6 Rounds
INNER BARREL : 64 mm
WEIGHT : 743 g
CO2 : 12 g
REF. VELOCITY : 120-140 m/sec

[G732 BK]

TYPE : CO2
LENGTH : 248 mm
RECEIVER : Metal
MAGAZINE : 6 Rounds
INNER BARREL : 98.5 mm
WEIGHT : 894 g
CO2 : 12 g
REF. VELOCITY : 120-140 m/sec

[G732 SV]

TYPE : CO2
LENGTH : 248 mm
RECEIVER : Metal
MAGAZINE : 6 Rounds
INNER BARREL : 98.5 mm
WEIGHT : 894 g
CO2 : 12 g
REF. VELOCITY : 120-140 m/sec

[G733 BK]

TYPE : CO2
LENGTH : 295 mm
RECEIVER : Metal
MAGAZINE : 6 Rounds
INNER BARREL : 136 mm
WEIGHT : 970 g
CO2 : 12 g
REF. VELOCITY : 120-140 m/sec

[G733 SV]

TYPE : CO2
LENGTH : 295 mm
RECEIVER : Metal
MAGAZINE : 6 Rounds
INNER BARREL : 136 mm
WEIGHT : 970 g
CO2 : 12 g
REF. VELOCITY : 120-140 m/sec

[G734 BK]

TYPE : CO2
LENGTH : 341 mm
RECEIVER : Metal
MAGAZINE : 6 Rounds
INNER BaRREL : 193.5 mm
WEIGHT : 1040 g
CO2 : 12 g
REF. VELOCITY : 120-140 m/sec

[G734 SV]

TYPE : CO2
LENGTH : 341 mm
RECEIVER : Metal
MAGAZINE : 6 Rounds
INNER BaRREL : 193.5 mm
WEIGHT : 1040 g
CO2 : 12 g
REF. VELOCITY : 120-140 m/sec

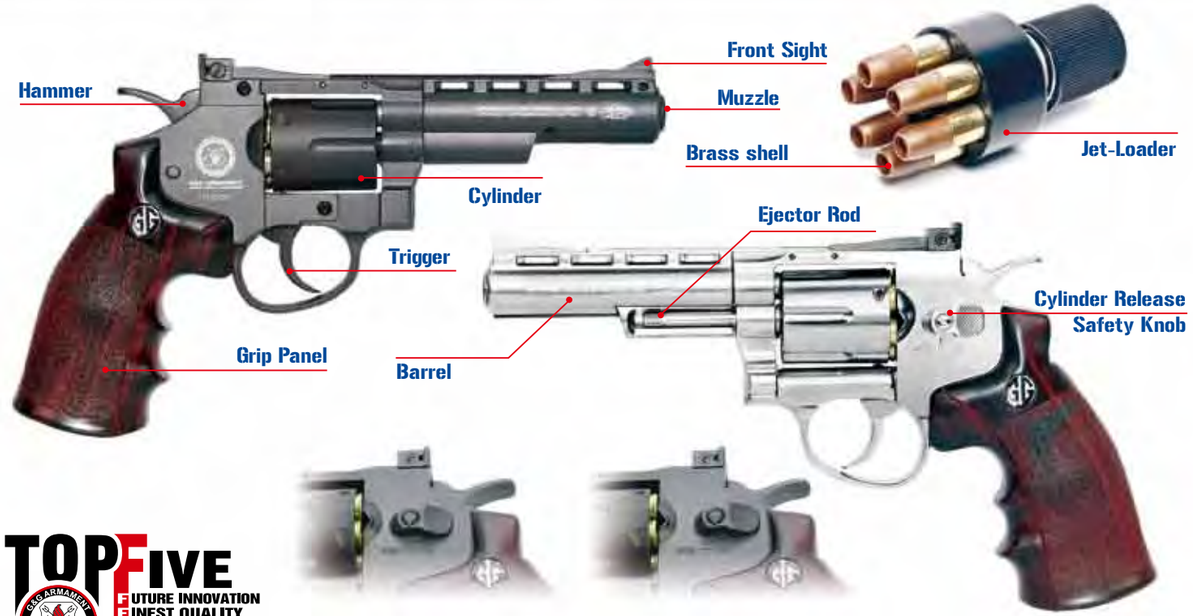

TOP FIVE
FUTURE INNOVATION
FINEST QUALITY
FAST SERVICE
FREE ITEMS
FAIR PRICE

Safety OFF:
Set the selector to the “F” position.

Safety ON :
Set the selector to the "S" position.

G732/G733/G734 Installing CO2 Cartridge

⚠ Use Only 12 gram CO2 cartridge.

⚠ Keep hands and face away from escaping CO2 gas. It can cause frostbite when come in contact with skin.

1. Hold the lower part of grip panel and slide out.
2. Lift up the grip panel to approxi mately 45 degrees upward.

⚠ Caution:
Slide out the grip panel gently to avoid damage on the plastic piece tab that holds the panel.

3. Lower the piercing screw by turning counter-clockwise.
4. Insert Co2 cartridge.
5. Turn the piercing screw clockwise to puncture the CO2 cartridge.

6. Push the pistol grip panel back into position.

G731 Installing CO2 Cartridge

⚠ Use Only 12 gram CO2 cartridge.

⚠ Keep hands and face away from escaping CO2 gas. It can cause frostbite if allowed to come in contact with skin.

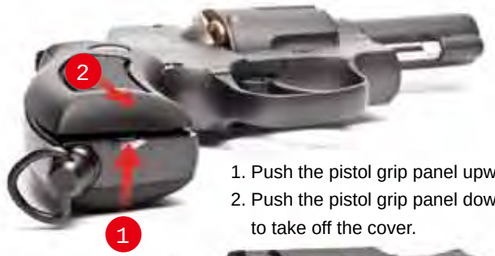

1. Push the pistol grip panel upward.
2. Push the pistol grip panel downward to take off the cover.

3. Install the CO2 cartridge.

4. Turn the puncture screw clockwise to puncture the CO2 cartridge.

5. Push the pistol grip panel back into position.

Firing And Rear Sight Adjustment

⚠ Make sure the gun is pointed at a safe target. Once the last BB has been shot from the gun, it is still possible for the trigger to be pulled, but only CO2 will be discharged.

1. Aim at a safe target. Since the CO2 gun will eject a powerful gas force, player should pay extreme attention to target selection and be aware that improper targets would make BB or steel shots rebound from the target.

2. When you are certain that the target and the surrounding area is safe, set to firing mode.

3. Pull the hammer or trigger to fire the revolver. (Never put your finger on the trigger until ready to fire.)

4. After shooting is complete, turn on the safety .

Windage adjustment :
Use flat head screw driver to adjust.

Elevation adjustment:
Use flat head screw driver to adjust.

Loading BB Pellets (Method 1)

1. Push and hold the selector to the "OPEN" position.

2. Push out the cylinder from the right hand.

3. Load the G&G 5.95 mm BB pellets into the brass shells until it clicks.

4. Insert six brass shells into the cylinder.

5. Push the cylinder back into position.

⚠ Always use the G&G BB pellet or diameter 5.94 ~ 5.96 mm BBs.

Loading BB Pellets (Method 2)

1. Insert six brass shells (with G&G 5.95mm BB pellets) into the Jet-Loader.

⚠ Aim at a safe target. Since the CO2 gun will eject a powerful gas force, player should pay extreme attention to target selection and be aware that improper targets would make BB rebound from the target.

2. Push and turn the knob clockwise to lock brass shells.

3. Insert the Jet-Loader into the cylinder.

4. Push the knob to release the brass shells into the cylinder.

5. Push the cylinder back into position.

Unloading BB Pellets (Brass Shells)

1. Push and hold the selector to the "OPEN" position.

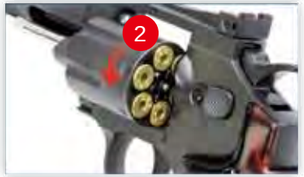

2. Push out the cylinder from the right hand.

3. Push the ejector rod to unload the brass shells.

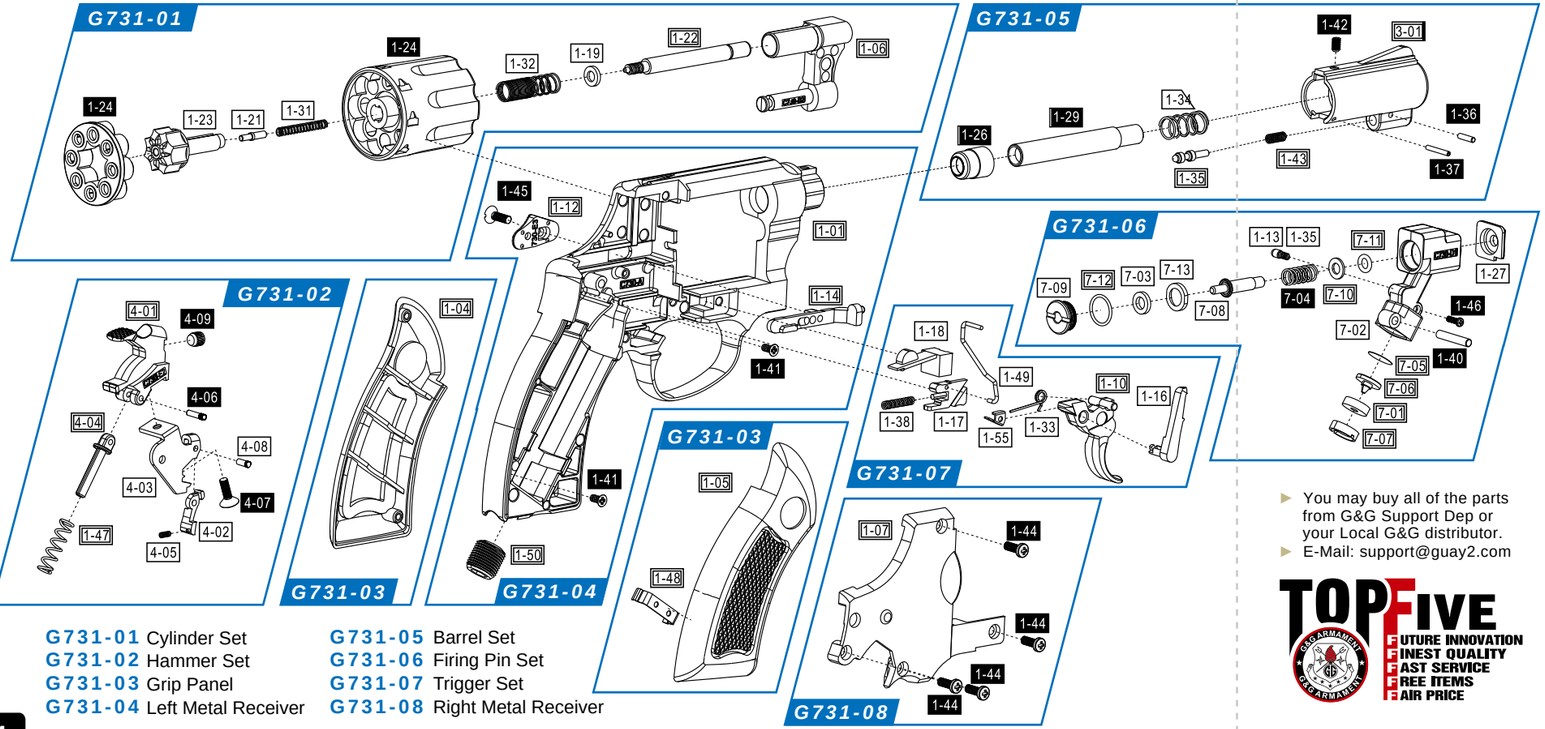

G731-01 Cylinder Set
G731-02 Hammer Set
G731-03 Grip Panel
G731-04 Left Metal Receiver
G731-05 Barrel Set
G731-06 Firing Pin Set
G731-07 Trigger Set
G731-08 Right Metal Receiver

Attention

1. If a BB does not fire after completing the operation steps, do not assume that the gun is unloaded. Always point the pistol at a safe direction.
2. After shooting is complete, the gun should be unloaded before storage. To unload the gun, always put the selector on safe mode, remove the CO2 cartridge, and remove the BB's from the magazine.
3. High temperatures can produce pressure in the CO2 cartridge that is considerably higher than the normal operating pressure. Such increased pressure may prevent the pistol from firing and may result in permanent damage to the gun. The maximum operating temperatures can easily be reached if the gun is left directly exposed to tthe sun; therefore, the user should not expose the pistol to high temperature conditions or direct sunlight for an extended period of time.
4. Rapid firing of the gun will cause temperature reduction in the pistol and CO2 gas. This will lower BB velocities and may even lower the gas pressure causing the pistol not to fire. This condition can be avoided by allowing more time between shots. This permits the gas to increase in temperature and pressure, and produce normal velocities.
5. Care should be exercised to ensure that the gun is not shot with a CO2 cartridge that is low in pressure as a BB may not be expelled from the barrel.
6. A CO2 cartridge contains gas under pressure, whether or not it has been inserted into a gun. If exposed to high temperatures (such as inside of a closed car with direct sunlight), it could explode. Be sure to store all cartridges in a cool place.

► You may buy all of the parts from G&G Support Dep or your Local G&G distributor.
► E-Mail: support@guay2.com

TOP FIVE
FUTURE INNOVATION
FINEST QUALITY
FAST SERVICE
FREE ITEMS
FAIR PRICE

G7 REVOLVER SERIES MANUAL

G&G ARMAMENT www.Guay2.com

TOP FIVE
FUTURE INNOVATION
FINEST QUALITY
FAST SERVICE
FREE ITEMS
FAIR PRICE

G732
Explosion View

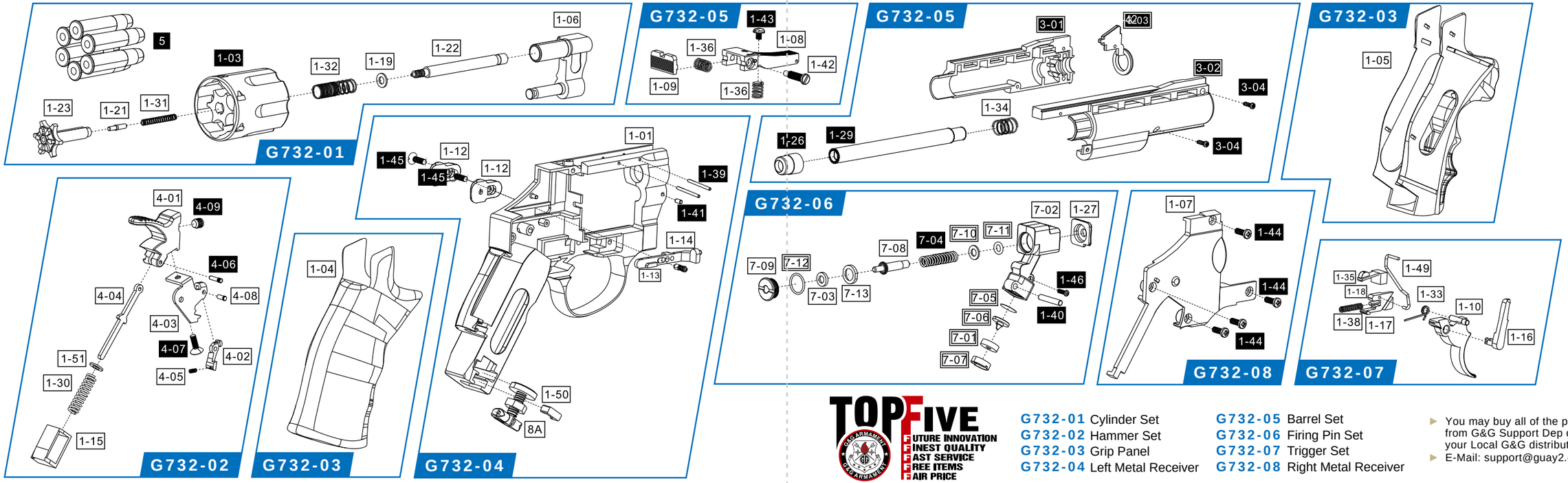

TOP FIVE
FUTURE INNOVATION
FINEST QUALITY
FAST SERVICE
FREE ITEMS
FAIR PRICE

G732-01 Cylinder Set
G732-02 Hammer Set
G732-03 Grip Panel
G732-04 Left Metal Receiver
G732-05 Barrel Set
G732-06 Firing Pin Set
G732-07 Trigger Set
G732-08 Right Metal Receiver

- You may buy all of the parts from G&G Support Dep or your Local G&G distributor.
- E-Mail: support@guay2.com

TOP FIVE
FUTURE INNOVATION
FINEST QUALITY
FAST SERVICE
FREE ITEMS
FAIR PRICE

6 STANDARD MAG
CO2
INTERMEDIATE

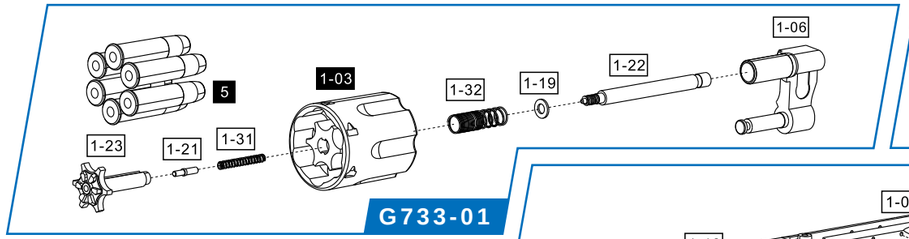

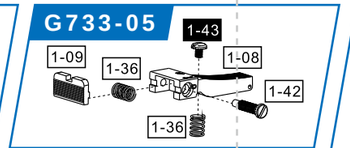

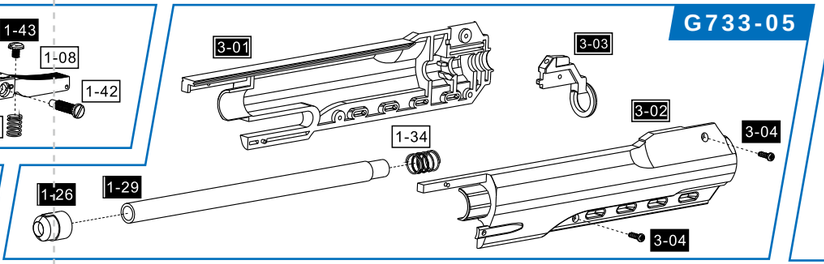

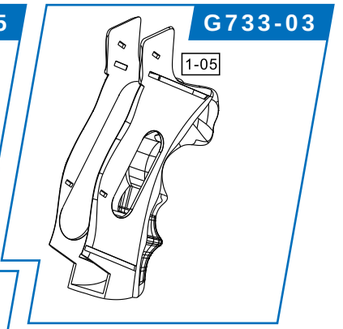

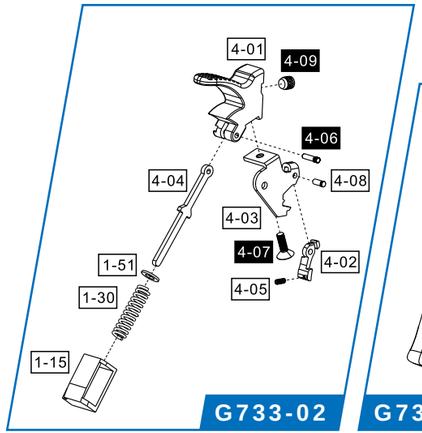

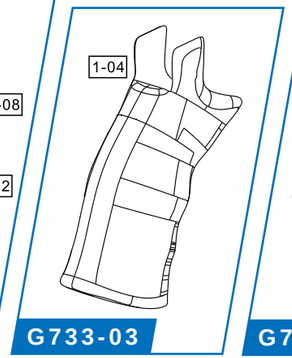

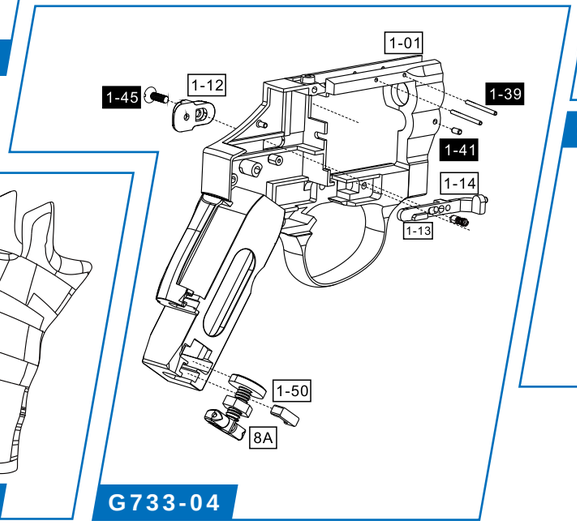

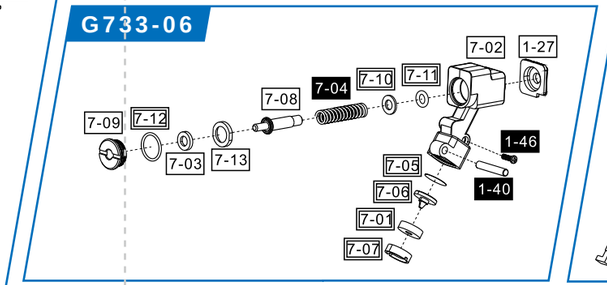

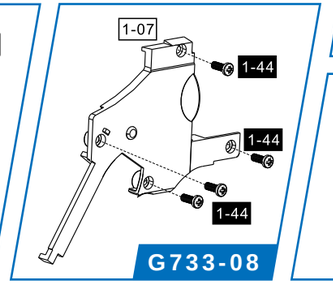

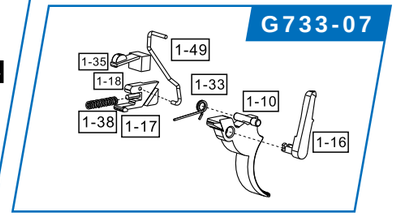

TOP FIVE
FUTURE INNOVATION
FINEST QUALITY
FAST SERVICE
FREE ITEMS
FAIR PRICE

G733-01	Cylinder Set	G733-05	Barrel Set
G733-02	Hammer Set	G733-06	Firing Pin Set
G733-03	Grip Panel	G733-07	Trigger Set
G733-04	Left Metal Receiver	G733-08	Right Metal Receiver

- You may buy all of the parts from G&G Support Dep or your Local G&G distributor.
- E-Mail: support@guay2.com

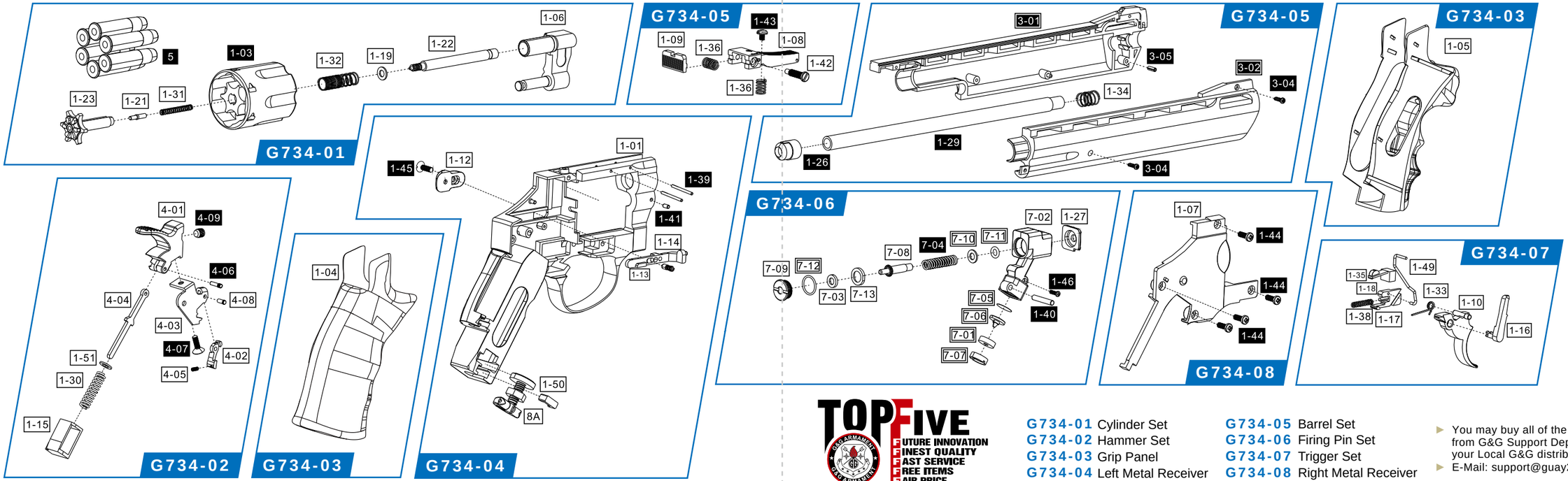

TOP FIVE
FUTURE INNOVATION
FINEST QUALITY
FAST SERVICE
FREE ITEMS
FAIR PRICE

G734-01 Cylinder Set	G734-05 Barrel Set
G734-02 Hammer Set	G734-06 Firing Pin Set
G734-03 Grip Panel	G734-07 Trigger Set
G734-04 Left Metal Receiver	G734-08 Right Metal Receiver

- You may buy all of the parts from G&G Support Dep or your Local G&G distributor.
- E-Mail: support@guay2.com